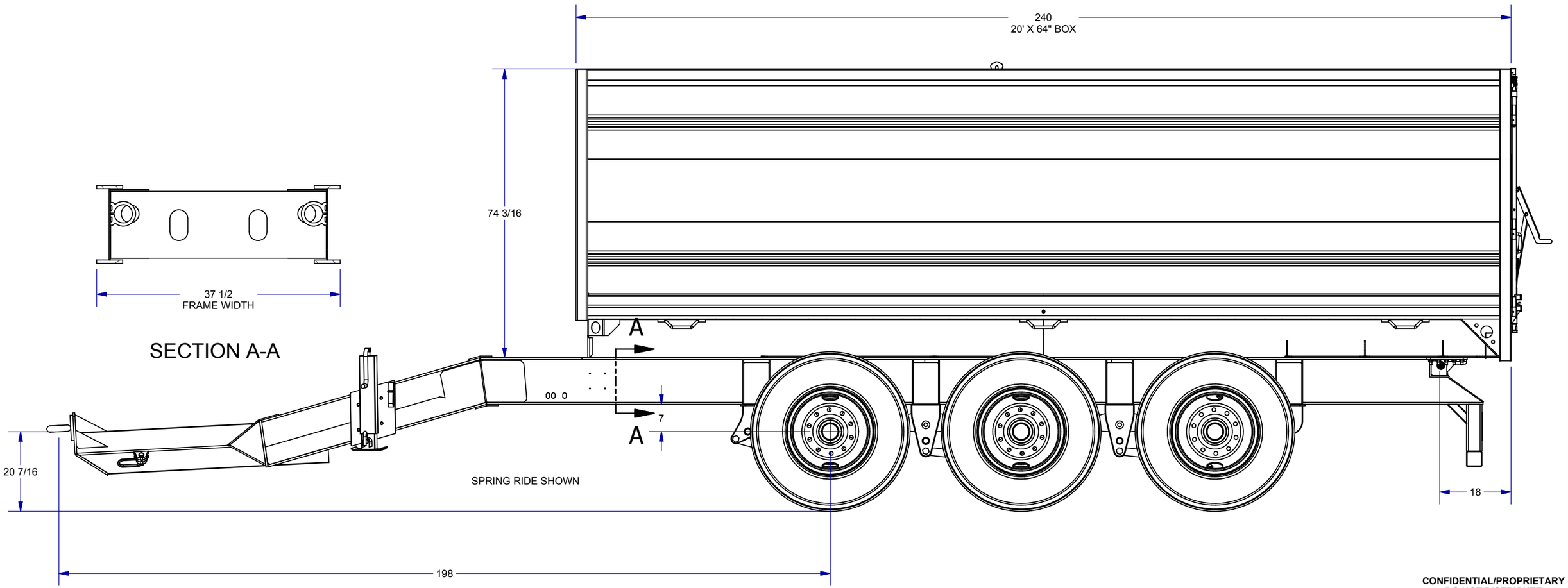

CONFIDENTIAL/PROPRIETARY
DO NOT DISTRIBUTE
©CANCADE COMPANY LTD, 2012
- ALL RIGHTS RESERVED -

CANCADE COMPANY LIMITED
1651 12th Street
Brandon, MB R7A 7L1
Phone: (204) 728-4450

TOLERANCES: X/X±1/16; X.X±0.1; X.XX±0.01; X.XXX±0.005; XX°±1°
DRAWING GENERATED FROM 3D MODEL, SEE MODEL FOR ANY MISSING DIMENSIONS

DIMENSIONS ARE IN INCHES
UNLESS OTHERWISE NOTED

DESCRIPTION

TRIDEM AG PUP SALES

MATERIAL

WEIGHT N/A

DRAWING DRAWING.idw

REV -

DRAWN BY:

DESIGNED BY: DYLANM

SIZE B | SCALE NTS | SHEET 1 OF 1

REV	DESCRIPTION	DATE	APPROVED
1			

REVISION HISTORY

C:\Users\Dylan\Desktop\Inventor Saves\TRIDEM AG PUP SALES DRAWING.idw